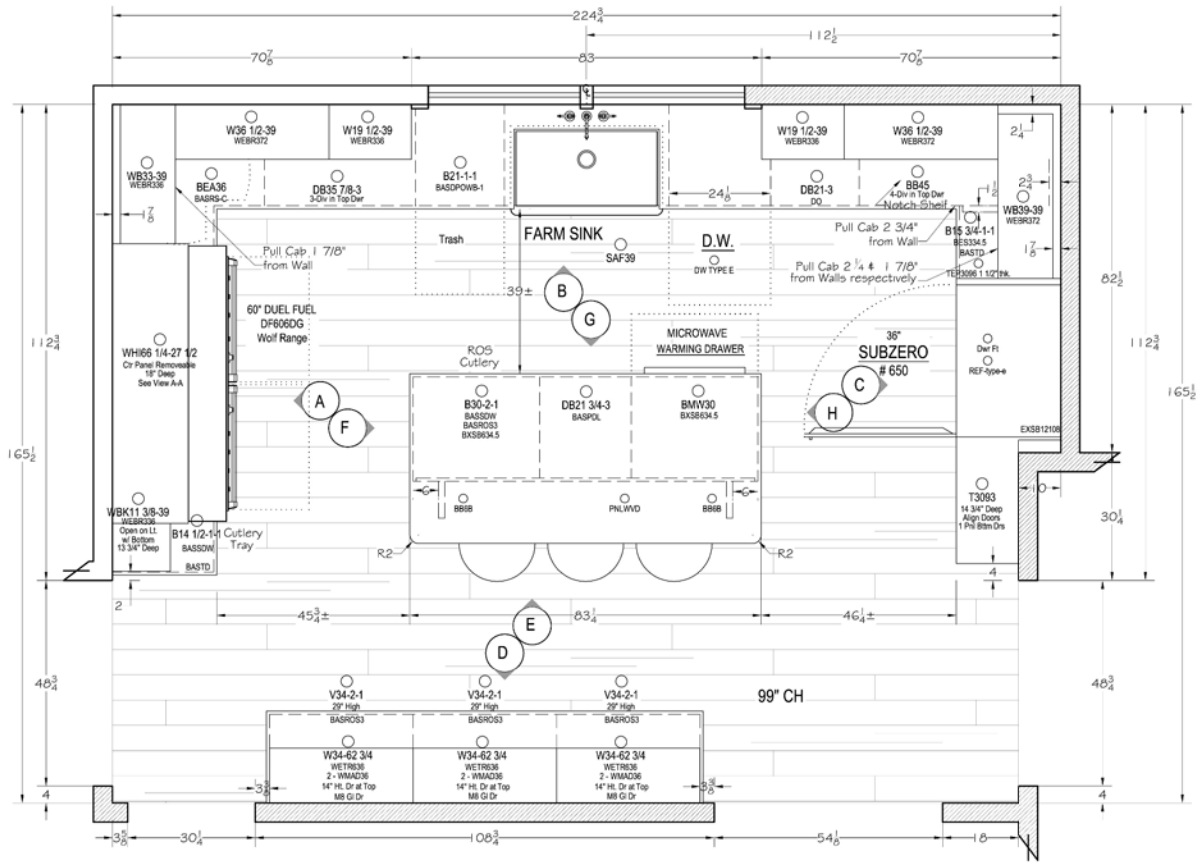

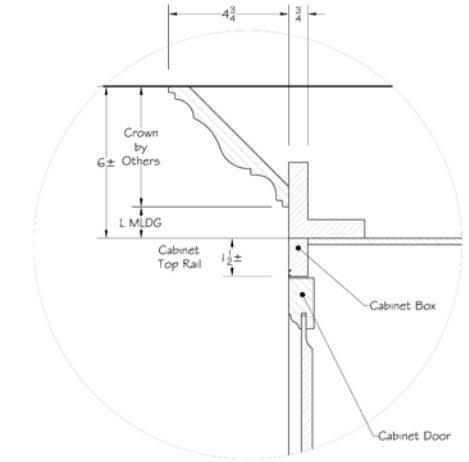

DETAIL A
SCALE 1/4" = 1"

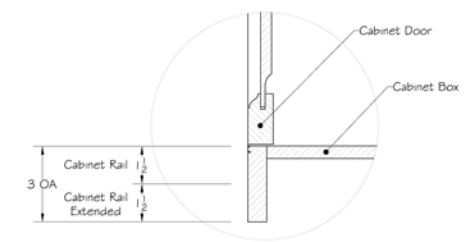

DETAIL B
SCALE 1/4" = 1"

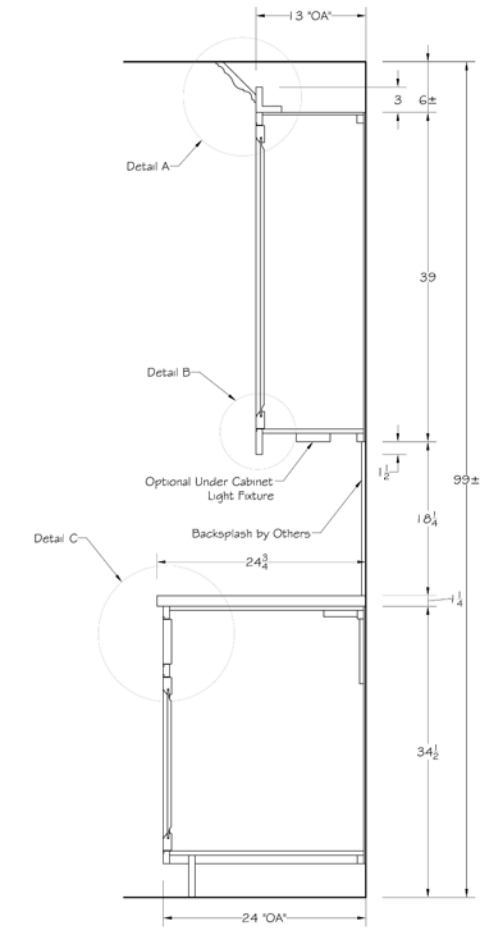

TYPICAL SECTION
SCALE 1" = 1'-0"

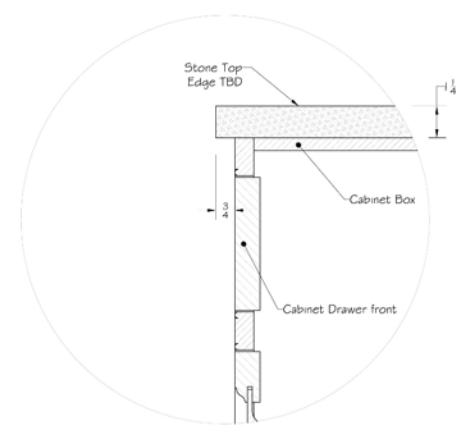

DETAIL C
SCALE 1/4" = 1"

DUTCH MADE
??? DOOR
Slab Dwr Fronts
NTS

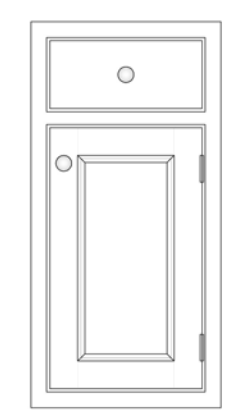

Detail of
Shallow Fronts

Detail of
Door Rails

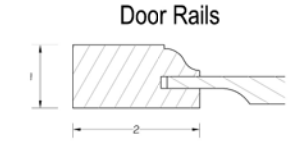

CABINET SPECS.

AREA	MANUFACTURER	STYLE	WOOD/FINISH	HINGES	HARDWARE
Kitchen Perm.					
Kitchen Island					
Butler's Pantry					
Master Bath					
Other Baths					

COUNTER SPECS.

AREA	MATERIAL	COLOUR	EDGE	B/S HEIGHT	SUPPLIER

APPLIANCE SPECS.

ITEM	MANUFACTURER	MODEL#	WIDTH	HEIGHT	DEPTH	PANELS	PURCHASED THROUGH
Refrig/Freezer							
U/C Refrig.							
Wine Stor.							
Range							
Cook top							
Island Trim							
Hood							
Hood Blower							
Hood Liner							
Ovens							
Wm. Drawer							
Wm. Drw. Fronts							
D.W.							
D.W. Fronts							
Microwave							
Micro. Trim Kit							

JOB SITE SPECS

CEILING HEIGHT:
SHEET ROCK THICKNESS:
WINDOW & DOOR HEADER HEIGHT:
DOOR CASING PROFILE: WIDTH: THICKNESS:
WINDOW CASING PROFILE: WIDTH: THICKNESS:
FLOOR MATERIAL: TYPE: THICKNESS:

NOTES:

ABBREVIATIONS

A.F.F.	ABOVE FINISH FLOOR	O.C.	ON CENTER
B.S.	BACKSPLASH	O.C.L.	OVER CABINET LIGHT
CBT.	CABINET	P/O	PULLOUT
CLG.	CEILING CENTERLINE	QTY.	QUANTITY
DP.	DEEP	REQ'D	REQUIRED
DIM.	DIMENSION	R.O.S.	ROLLOUT SHELF
DIV.	DIVIDER	S.S.	STAINLESS STEEL
DWR.	DRAWER	T.B.D.	TO BE DETERMINED
ELEV.	ELEVATION	TYP.	TYPICAL
GLS.	GLASS	U.C.	UNDER CABINET
GFCI	GROUND FAULT CIRCUIT	U.C.L.	UNDER CABINET LIGHT
HT.	HEIGHT	U.O.N.	UNLESS OTHERWISE NOTED
L.V.	LOW VOLTAGE	V.I.F.	VERITY IN FIELD
N.T.S.	NOT TO SCALE	W.H.	WATER HEATER
N.I.C.	NOT IN CONTRACT	WD.	WOOD
R.P.	RAISED PANEL	TOST	TILT OUT SOAP TRAY
T.T.	TRIM TO TRIM		

GENERAL NOTES

1. ALL DIMENSIONS ARE FINISH TO FINISH UNLESS OTHER WISE NOTED AND SHALL TAKE PRESIDENCE OVER SCALE

2. OWNER/CONTRACTOR TO FIELD VERITY ALL DIMENSIONS AND EXISTING CONDITIONS AND NOTIFY PUTNAM KITCHENS OF ANY OMISSION, DISCREPANCIES AND/OR CONFLICTS PRIOR TO THE COMMENCEMENT OF WORK

3. GENERAL CONTRACTOR IS REPONSIBLE FOR ANY SUB-CONTRACTORS WORK AS WELL ADHERENCE TO ALL CODES PERTAINING TO THE JOB SITE.

4. CONTRATOR WILL TAKE INTO DONSIDERATION ALL CODES, STRUCTURAL CONDITIONS AND MANUFACTURER'S SPECIFICATIONS, WHICH SHALL TAKE PRECEDENCE OVER DIMENSIONS, SERVICE LOCATIONS OR NOTES WRITTEN ON PLANS.

5. ANY DEVIATION FROM THESE PLANS EXCEPT AS NOTED AVOVE IS THE SOLE REPONSIBILITY OF THE OWNER/CONTRACTOR AND PUTNAM KITCHENS IS FREED OF ALL LIABILITY.

6. THESE PLANS ARE STRICTLY FOR DESIGN PURPOSED IF MAJOR STRUCTURAL CHANGES TO THE PREMISES ARE REQUIRED IT SHALL BE THE OWNER/CONTRACTOR RESPOSIBILITY TO OBTAIN NECESSARY ENGINEERED PLANS FOR SUBMITTAL TO THE LOCAL BUILDING DEPARTMENTS.

7. ITEM SPECITIED ON PLANS ARE NOT NECESSARILY PROVIDED BY PUTNAM KITCHENS. TO REFER TO CONTRACT/INVOICE

406 East Putnam Ave. ● Cos Cob, CT 06807 ● 203-661-2270